Seventh Symposium on Salt, Vol. I 305–312 (1993)
Elsevier Science Publishers B.V., Amsterdam

Potential of Spiral Mining for Excavating Storage Caverns in Salt

J.D. Dixon[1], M.A. Mahtab[2] and P. Grasso[2]

[1]*US Bureau of Mines, Spokane Research Center, USA*
[2]*GEODATA, Turin, Italy*

ABSTRACT

With the exception of excavation by solution, methods for the underground excavation of salt have generally employed conventional pillared open stopes. A regular layout is generally used if the ore body is uniform, but a random layout may be preferred if the deposit is not uniform. The novel concept of spiral mining offers some inherent advantages compared to these traditional layouts. Spiral mining was described as "spiral slot-and-pillar mining with backfill" at the CIMM symposium on backfill (in Montreal, 1989) as a transformation of the Finnish mining method termed "concrete pillar stoping". Advantages of spiral mining include a uniform distribution of stress in the abutment zones, the capability for continuous mining, and the capability to adapt mechanical excavation techniques. In this paper, spiral layouts are discussed with specific reference to the method's potential for excavating storage caverns in salt for civil use. General types of mine layouts involving flat and helical spirals are suggested for mining bedded and domed salt deposits. A preliminary assessment of applying mining techniques and rock mechanics to domed salt is given. The development of mine dimensions for the layout of a continuous pillar design is described. Advantages are shorter and therefore more economical haulage and ventilation, compactness of the excavation "module", and enhanced ability of a mine operator to monitor the behavior of a cavern.

INTRODUCTION

The idea of mining a geologic horizon or ore body in the shape of a spiral, where the face is advanced or retreated about a center, is not new. In the 1950s, the idea was discussed for mining a potash horizon in Saskatchewan, Canada, but was not put into practice (Prugger, 1991). To the best of our knowledge, the literature offers no actual examples of the use of spiral mining.

The conceptual layout of a spiral mine (Fig. 1) was described by Dixon (1989) as "spiral slot-and-pillar mining with backfill" as an extension of the Finnish concept of concrete pillar stoping (Matikainen and Sarkka, 1982).

The initial spiral starts from the edge of a central pillar that contains a multipurpose central shaft for haulage, services, and ventilation. Four radial cross-cuts are considered adequate for ventilation and haulage. The distances required for these operations may be further reduced by cutting slots through the pillars to make intermediate connections. One key advantage of spiral mining is the option for continuous excavation by turning the advancing face without having to retreat the excavator. In some instances of longwall mining, this advantage is being exploited by curving the advancing panel to achieve a 180° change in the direction of advance (Gottig, 1978).

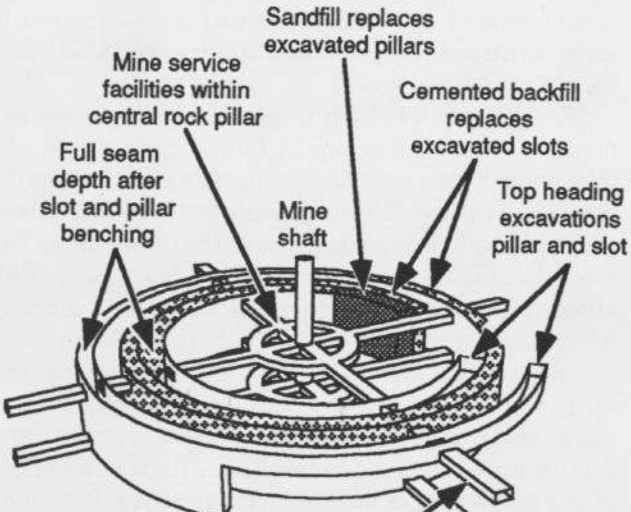

Fig. 1. Layout of a spiral mine.

Spiral mining has some attractive features for dry mining of salt and creation of storage caverns. Continuous miners can be used to excavate a two-dimensional spiral on a given mining level and subsequently to construct a ramp up or down to another mining level where a retreating or advancing spiral can be initiated. The outer boundary of a multiple-level spiral mine layout can be shaped like a cylinder with a circular or oval base or like a spheroid to better exploit the near-hydrostatic virgin stress conditions to be expected at moderate depths in relatively thick deposits of salt.

SPIRAL MINE LAYOUT AND STABILITY

Geological considerations

The term "salt" signifies both halite and potash in either bedded or domed configurations. Geological considerations in a salt deposit or stock are the same for both conventional room-and-pillar mining and spiral mining, although spiral mining requires a more homogeneous material in order to exploit its relative advantages. The salt deposit is assumed to be extensive both horizontally and vertically.

Based on a review of large caverns in various geologic media in France, Duffaut et al. (1986) observed that the shape and size of caverns depended more or less on the geology. They noted a maximum extraction ratio in the Varangeville Mine of 75% using 15 by 15-m pillars and 15-m-wide rooms in a 4.5-m-thick salt bed at a depth of 200 m. In contrast, solution-mined cavities achieved diameters of 80–120 m and heights of 15–350 m. Clearly, the smaller dimensions of dry-mined cavities were dictated by considerations of safety and stability (and also by the lack of an arched roof).

Weeks Island (which is used as a reference salt dome) is one of a group of five islands where dry mining has been practiced using the room-and-pillar method. Kupfer (1968) postulates that these salt domes moved differentially and that "spines" of salt moved upward from the mother bed, generating shear zones that incorporated sediments such as anhydrite, sandstone, clay, and hydrocarbons.

Impure salt, gas outbursts, and problems of stability were consequences of the shear zones. For the purpose of illustrating the potential of spiral mining, it is assumed that the excavation will be in a horizon of the dome that is devoid of shear zones. In a dome on nearby Avery Island, which did not have the problem of gas outbursts, 46-m-wide by 46-m-high rooms were successfully mined at an extraction ratio of 75%. Here, Jacoby (1976) envisioned the possibility of increasing room widths to 61 m.

Spiral layout

All spiral mining variations involve mining around a central pillar. Access to mining operations could be from one or more shafts within this central pillar or from shafts outside the mining zone. The planform of a spiral layout and central pillar (circular, oblong, or irregular) can be arranged to accommodate the nature and shape of the deposit or the shape of the property boundary. Anomalies in mining zones can be avoided by adjusting the headings. The direction of a spiral can be inward-out or outward-in. When mining outward-in, the central pillar would initially be large, but would become smaller as mining progressed, and stresses on the pillar would increase. In this scenario, mining could continue inward until the signs of instability are observed. If the mining direction were inward-out, the initial size of the central pillar should be determined from a premining analysis. Either design must have the flexibility to accommodate the changing demands of production. For this, additional mining faces can be provided through use of a layout having multiple spirals.

In a bedded deposit, the spiral layout would be limited to one horizon (flat spiral). For domed salt or massive deposits, the spiral layout could follow a vertical decline (helical spiral) or could be adapted for mining multiple horizons using flat spirals. A salt deposit would be mined using either room-and-pillar or continuous pillar (or long pillar) layouts. A room-and-pillar spiral layout is shown in Fig. 2. Continuous pillar mining is a derivative of room-and-pillar mining, in which the pillars are continuous and are not interrupted by crosscuts, as shown in Fig. 3. Ventilation and haulage between adjacent stopes could be achieved by drilling small holes or cutting small openings.

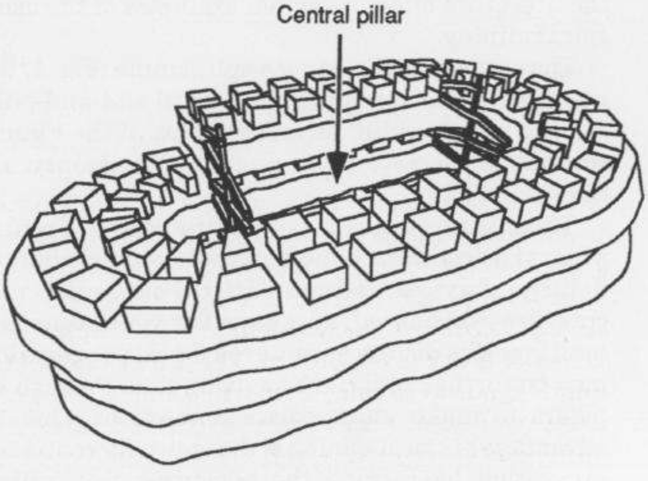

Fig. 2. Room-and-pillar spiral layout.

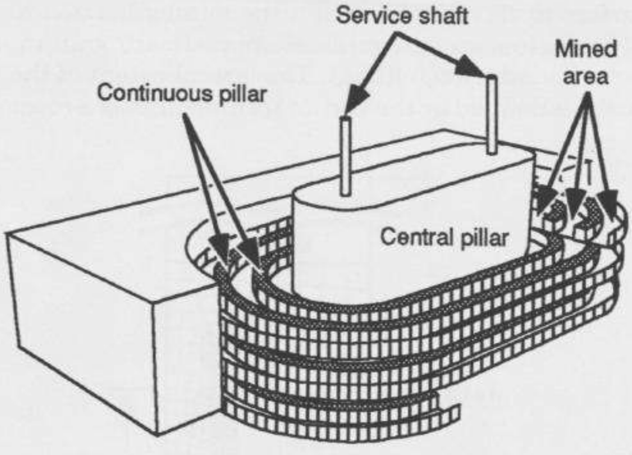

Fig. 3. Continuous pillar mining.

For this presentation, continuous pillar mining in a helical spiral pattern (Fig. 3) is used to illustrate the application of mining domed salt. An advancing, counterclockwise spiral with constant increments between curves generated about a central pillar is described here. The layout is longer in one direction than in the other, in keeping with the plan view of the dome. No technical problems are foreseen in providing a guidance system for aligning a continuous miner along the spiral automatically. Service shafts could be excavated in the central pillar.

The equipment needed includes a continuous miner for face excavation and a road-header for excavating slots in pillars for service connections and for occasional arching of the roof, a "cherry picker" for services and occasional installation of roof bolts, a haulage arrangement that uses a segmented belt system, and auxiliary tired vehicles.

The spiral layout is obviously more adaptable to automation than are conventional systems that have to cope with irregular geometries and stop-and-go operations.

Mine stability

The spiral layout developed here uses the plan of the Weeks Island Mine in Louisiana, USA (Mahtab et al., 1979) as a guide for establishing dimensions. The nominal dimensions of the two levels at the mine (now used for oil storage) are: room width, 21.3 m; room (and pillar) height, 22.9 m; pillar dimension, 30.5 by 30.5 m; sill thickness from floor of upper level to roof of lower level, 38.1 m. The dimensions of the spiral layout were calculated while maintaining consistency of areal and vertical extraction ratios and equivalence of pillar strengths with those of the Weeks Island Mine.

In the following discussion, the rock mechanics aspects of a multiple-level layout of pillar height, h, and sill thickness, t, are examined. The vertical extraction ratio,

$$R_v = \frac{h}{h + t} = 0.375 \tag{1}$$

is the same as the extraction ratio for the two levels in the Weeks Island Mine. Depending on the height of the face, a level could be mined using one or more benches. In this example, an 18.3-m-high room would be excavated in three passes, with 6.1-m-high benches. For a room of this height, the corresponding sill thickness, t, is 30.5 m as calculated with equation (1).

The next step would be to find the room-and-pillar widths for the continuous pillar layout in terms of square pillar layout. The extraction ratios for continuous and square pillar layouts are given by the following equations:

$$R_{A_L} = \left(\frac{s}{s + w}\right)_L \tag{2}$$

and

$$R_{A_S} = \left[\frac{s(s + 2w)}{(s + w)^2}\right]_s \tag{3}$$

where R_A = extraction ratio, s = room width (roof span), w = pillar width, and subscripts L and S refer to continuous and square pillars, respectively.

By equating the two above equations, it follows that

$$\left(\frac{s}{w}\right)_L = \left[\frac{s(s + 2w)}{w^2}\right]_s \tag{4}$$

For equivalently strong continuous and square pillars, pillar strength formulas given by Wilson and Ashwin (1972) can be used to find pillar widths in terms of pillar heights, as follows:

$$w_L = w_s \left[\frac{2}{3} \cdot \frac{h_L}{h_s} \cdot \frac{w_s}{w_s + s_s}\right]^{1/2} \tag{5}$$

Finally, the continuous room width can be found by substituting w_L (equation (5)) in equation (4) to derive

$$s_L = \left(\frac{2}{3} \cdot \frac{h_L}{h_s} \cdot \frac{w_s}{w_s + s_s}\right)^{1/2} \frac{s_s}{w_s} (s_s + 2w_s) \tag{6}$$

Thus, the "equivalent" dimensions obtained for the first level of the continuous pillar layout are room width, $s_L = 32.3$ m and pillar width, $w_L = 17.1$ m. As mining depth increases, however, the pillar would be subjected to greater vertical loads and pillar widths must be increased to provide additional strength. The average vertical stress, σ_P, on a pillar at midplane for a multiple-level mine ($n = 1,2,3,...$) is

$$\sigma_{P_n} = \gamma\left[\frac{1}{1 - R_A}\left(H + (h + 2t)(n - 1)\right) + \frac{h}{2}(2n - 1)\right] \quad (7)$$

where H = mine level depth and γ = density of salt rock.

Although pillar width might be increased in proportion to increases in vertical load, the resulting pillar would be overly strengthened as a consequence of the increased pillar width-to-height ratio. The strength formula of Wilson and Ashwin (1972) for continuous pillars can be applied to compensate for such changes so that pillars at any depth are equivalent in strength.

The above considerations can be applied to find pillar widths at two successively deepened mine levels. The starting depth is 164.6 m, and the decline of the spiral is 48.8 m per revolution. From equation (7) it can be found that $\sigma_{P2} = 1.22\ \sigma_{P1}$ and $\sigma_{P3} = 1.18\ \sigma_{P2}$. The resulting expressions for pillar widths at mine levels 2 and 3 are $w_2 = w_1(1.22)^{1/2} = 18.9$ m, and $w_3 = w_2(1.18)^{1/2} = 20.4$ m. Corresponding room widths are $s_2 = 30.5$ m and $s_3 = 29.0$ m.

A finite-element analysis gave stress distributions for this design. Of interest were development of tensile stresses in the sill that could cause cracking or slabbing, collapse of the sill, floor heaving or pillar punching at sill–pillar intersections, development of a plastic state of stress and creep deformation, and the effects of horizontal stress and mine depth. The following physical properties of salt are assumed for the Weeks Island Mine (after Van Sambeek et al., 1979): modulus of elasticity = 2.62 GPa; density = 2163 kg/m^3; tensile strength = 1069 kPa; compressive strength = 13,894 kPa; cohesion = 2275 kPa; and angle of internal friction = 56°.

The finite-element analysis was made assuming two-dimensional, plane-strain, linear-elastic conditions, an approximation of the actual conditions that involve a three-dimensional mine layout, and a material that has nonlinear and time-dependent stress–strain responses. While this approach is useful for obtaining preliminary assessments of a design, a more comprehensive approach would be preferred for the development of an actual design.

The finite-element idealization is shown in Fig. 4. The model extends vertically down from the ground surface (0 elevation) through the mining horizon to 570 m below ground surface (approximating an infinite boundary condition). The lateral extent of the model is defined by the vertical center-lines of a room

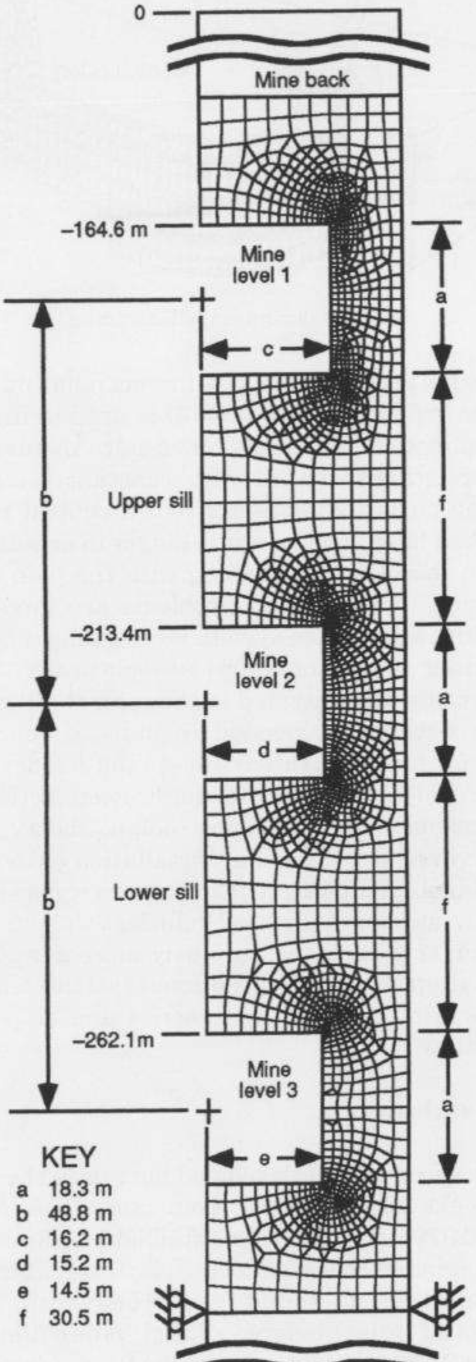

Fig. 4. The finite-element idealization.

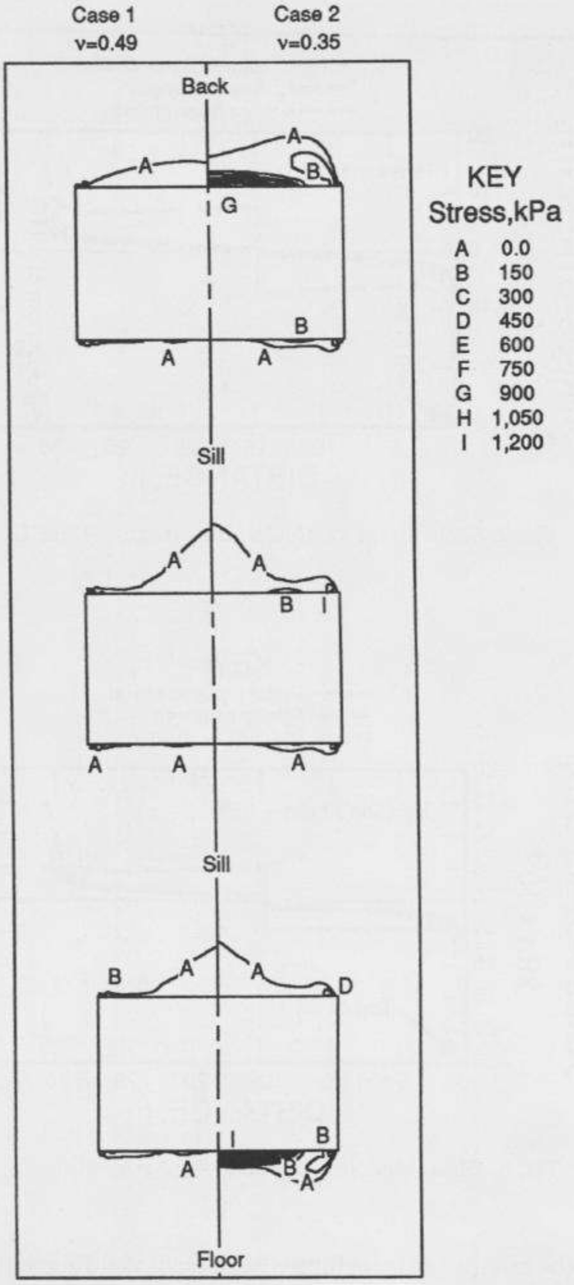

Fig. 5. Contours of maximum tensile principal stresses throughout the mining zone.

and the adjacent pillar. With these two boundaries fixed against lateral deformation, planes of symmetry are established that simulate the effect of an infinite number of parallel entries, a condition that approximates a pillar near the center of a panel having a large number of entries. As shown in Fig. 4, the model represents a cross section of the mine and contains three levels, each separated by a 30.5-m-thick sill. The pillar widths are increased with mining depth (see above) and are 17.1, 18.9, and 20.4 m wide respectively.

Two studies were conducted in which horizontal field stresses were applied to the model. The horizontal field stress is developed through the Poisson effect and is obtained by confining the vertical boundaries of the model. Case 1 uses a Poisson's ratio of 0.49, resulting in a near hydrostatic stress field. Case 2 uses a Poisson's ratio of 0.35 and results in a lower horizontal field stress. The second case provides an opportunity to model a situation where zones in the salt contain impurities such as sediments. The following is a summary of the results of the analyses.

1. Tensile stress in mine back and sill

For case 1, the maximum tensile stress in the mine back was negligible and the maximum tensile stress in the sill was about 70 kPa, well below the material tensile strength. Contours of the maximum tensile principal stresses throughout the mining zone are given in Fig. 5. Tensile stresses in the sills are plotted in Fig. 6.

For case 2, the maximum tensile stress was 1103 kPa at the center of the mine back (see Fig. 5). This slightly exceeded the tensile strength of rock salt. Therefore, fracturing of the mine back would be possible, suggesting that ground control measures should be used, such as roof bolting or the excavation of an arch in the mine back. In the sill, the maximum tensile stress was about 150 kPa.

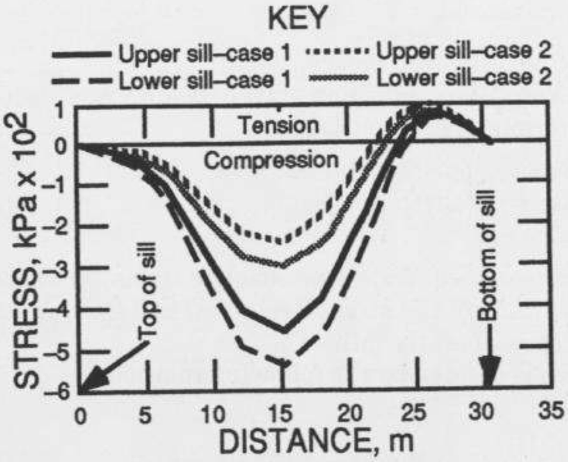

Fig. 6. Plot of tensile stresses in sills.

2. Sill pillar shear stress

Because values for the complete state of stress (σ_x, σ_y, and τ_{xy}) along the sill–pillar interface were available from the finite-element analysis, an estimate of the shear strength could be found by using the Coulomb failure criterion, which is given as

$$s = c + \sigma_n \tan \phi \qquad (8)$$

where s = shear strength, c = cohesion, σ_n = normal stress on the plane of potential failure, and ϕ = angle of internal friction.

From the geometry of the Mohr's circle of equilibrium (compressive stress is negative), σ_n is found to be

$$\sigma_n = \frac{\sigma_x + \sigma_y}{2} + \left\{\left[\frac{(\sigma_x - \sigma_y)}{2}\right]^2 + \tau_{xy}^2\right\}^{1/2} \sin \phi \qquad (9)$$

where σ_x = normal stress in the x-direction, σ_y = normal stress in the y-direction, and τ_{xy} = shear stress.

Furthermore, the shear stress acting on the plane of potential failure, τ, is found to be

$$\tau = \left\{\left[\frac{\sigma_x - \sigma_y}{2}\right]^2 + \tau_{xy}^2\right\}^{1/2} \cos \phi \qquad (10)$$

After solving these expressions, s, τ, and τ_{xy} were plotted along the sill–pillar interface between mine levels 1 and 2 (Figs. 7 and 8). These graphs show that the shear strength at all points across the sill–pillar interface exceeded the shear stress by a substantial margin. The results indicate that problems of pillar–floor punching or floor heaving would be minimal.

3. Creep-induced deformation

Von Mises criterion, given below, was used to determine failure of the salt.

$$\sigma_e = \{3 J_2\}^{1/2} \geq C_o \qquad (11)$$

where σ_e = equivalent or effective stress, J_2 = second invariant of the stress deviators, and C_o = uniaxial compressive strength.

J_2 is defined by the following relation

$$J_2 = \frac{1}{2}\{(\sigma_3 - \sigma_2)^2 + (\sigma_3 - \sigma_1)^2 + (\sigma_2 - \sigma_1)^2\}^{1/2} \qquad (12)$$

where σ_1, σ_2, and σ_3 are the principal stresses.

The onset of creep deformation can be predicted by comparing the effective stress at locations in the model to the uniaxial compressive strength. The results of this computation, shown in Fig. 9, were well below the uniaxial compressive strength throughout the model, except in the localized zones of the sill–pillar interface where local yielding would be expected to occur. These results were also in general agreement with work reported by Van Sambeek et al. (1979) who examined the stability of the Weeks Island Mine.

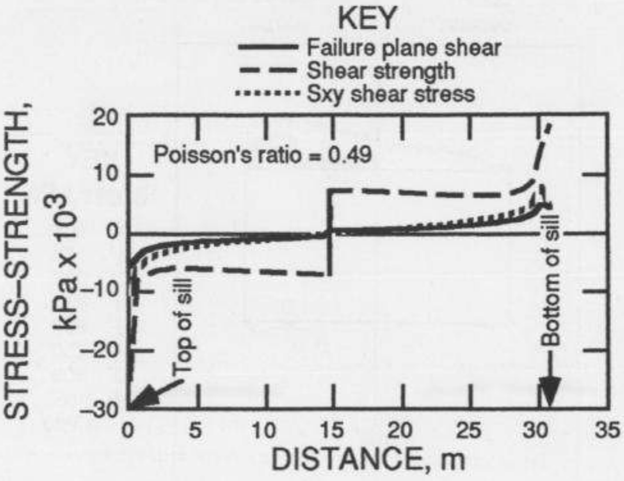

Fig. 7. Shear stress vs. Coulomb strength — Case 1.

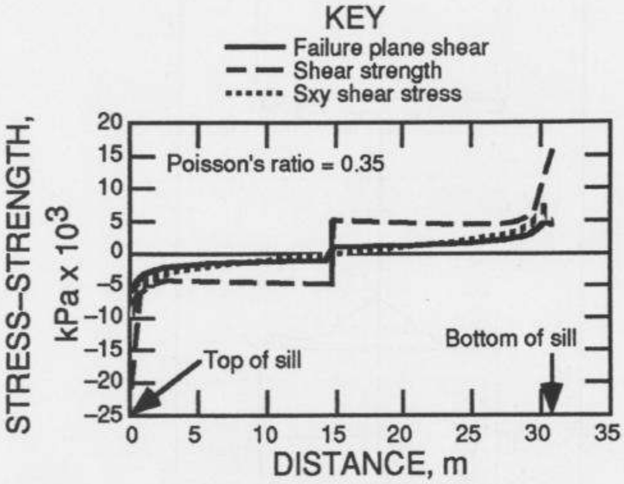

Fig. 8. Shear stress vs. Coulomb strength — Case 2.

4. Horizontal field stress and mine level depth

The contours of tensile and effective stresses in the model at different mine levels and for cases 1 and 2 are shown in Figs. 5 and 9, respectively. These results show that the magnitudes of tensile stresses are nearly identical at both levels and that effective stresses in the pillars and sills increase only slightly with mine depth (Fig. 9).

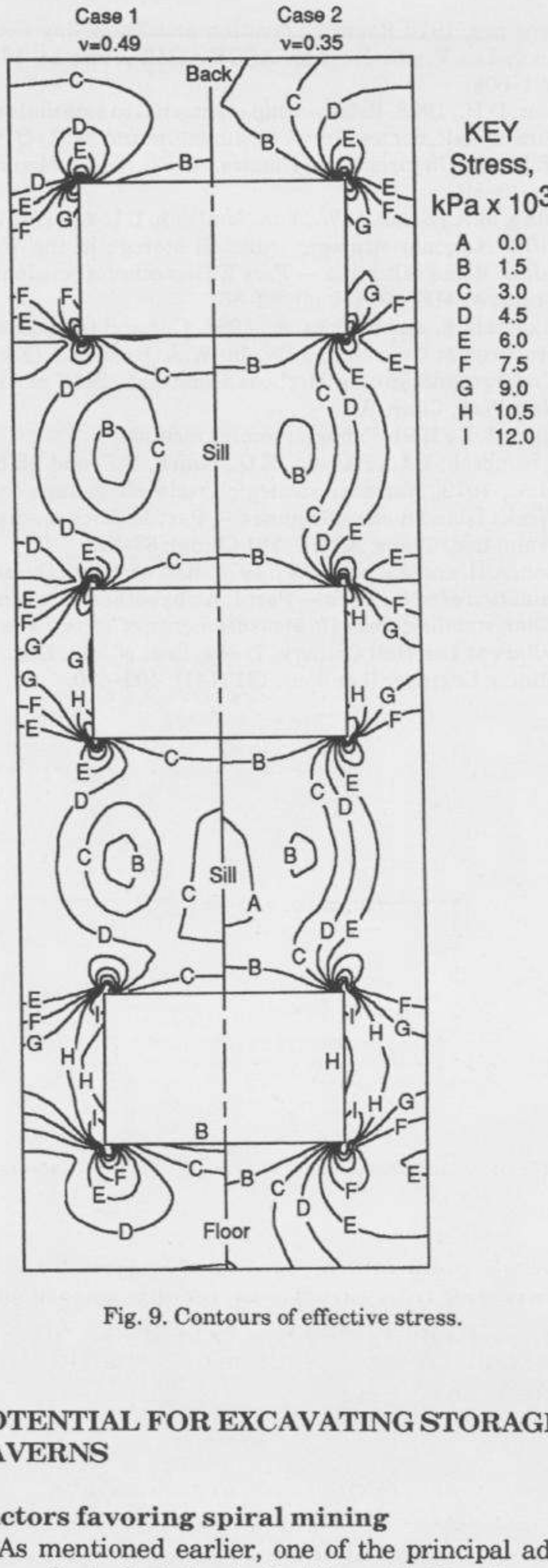

Fig. 9. Contours of effective stress.

POTENTIAL FOR EXCAVATING STORAGE CAVERNS

Factors favoring spiral mining

As mentioned earlier, one of the principal advantages of spiral mining is that it would allow the use of a continuous miner. Other potential benefits include:

- Fewer auxiliary openings would be needed,
- Labor requirements would be reduced,
- Requirements for ventilation would be reduced, and
- Distances for haulage, ventilation, and power supply would be lessened.

The spiral layout also has several potential geomechanical advantages.

- The higher strength of long, curved pillars would allow a higher overall extraction ratio than used in conventional room-and-pillar mining;
- Pillar decay caused by spalling would be substantially reduced, thus assuring long-term use of a storage cavern, especially when storing retrievable dry goods or reprocessable waste;
- Increased overall stability of the mine would result because of the cylindrical or spheroidal shape of a multiple-level spiral mine. The potential for surface subsidence would be greatly reduced by a planned spheroidal boundary.

Spiral mining methods used to mine caverns in salt would be very appropriate for permanent disposal of toxic waste because the waste and salt could be used as backfill. This would be a particularly attractive option in a low-grade, non-commercial salt deposit.

Because of the compactness and symmetry of the layout, *in situ* monitoring of ground behavior would be relatively easy.

Potential problems

Some potential problems would need to be resolved before spiral mining could be used to design a cavity for storage.

- The assumption that the salt was homogeneous was necessary to realize high extraction ratios and roof stability. The economics of spiral mining versus conventional mining would have to be evaluated for a specific site in a heterogeneous deposit.
- Spiral mining precludes selective mining. Therefore, potentially weak or gas-outburst-prone zones would have to be crossed, and ways to deal with resulting problems would have to be developed.
- Capital costs for starting up mining operations might be higher than for conventional mining.
- Special legal exemptions might be required from mine safety agencies (like MSHA in the USA).

CONCLUSIONS

Spiral mining as a method for excavating storage caverns in salt appears to be conceptually attractive from the viewpoints of economy, operation and access, and conservation of the resource. The basic assumption of homogeneity of the salt presents a problem which may be partially resolved by designing small spiral layouts in homogeneous domains. Thick horizons of bedded and domed salt are found in various parts of the world; a spiral layout would offer a better choice for both commercial mining and mining to create a storage area for dry goods, hydrocarbons, and toxic wastes (including low-level nuclear waste). The next step will be to assess the feasibility of using spiral mining techniques to excavate a storage cavern in a selected site in salt.

REFERENCES

Dixon, J.D., 1989. Spiral slot-and-pillar mining with backfill. In: F.P. Hassini, M.J. Scoble and T.R. Yu (Editors), Innovations in Mining Backfill Technology, Proceedings of the 4th International Symposium on Mining with Backfill. A.A. Balkema, Rotterdam, Netherlands. pp. 225–234.

Duffaut, P., Piguet, J.P. and Therond, R., 1986. A review of large permanent rock caverns in France. In: K.H.O. Saari (Editor), Proc. Int. Symp. on Large Rock Caverns, Helsinki. Pergamon Press, Oxford, Vol. 1, pp. 55–66.

Gottig, P., 1978. Longwalls About-Face Profitability. Coal Age, Sept.: 132–141.

Jacoby, C.H., 1976. Creation and stability of large sized openings in salt. In: R.J. Robins and R.J. Colon (Editors), Proceedings, 1976 Rapid Excavation and Tunneling Conference, Las Vegas, Nevada. ASCE-AIME, June 14–17. pp. 591–608.

Kupfer, D.H., 1968. Relationship of internal to external structure of salt domes. In: J. Braunstein and G.D. O'Brien (Editors), Diapirism and Diapirs, AAPG, Tulsa, Memoir 8. pp. 79–89.

Mahtab, M.A., Lamb, D.W., Van Sambeek, L.L. and Gill, J.D., 1979. National strategic crude oil storage in the Weeks Island dome salt mine — Part I: Geotechnical evaluation. Trans. ASME, 101 (June): 82–86.

Matikainen, R. and Sarkka, P., 1982. Cut and fill stoping as practiced at Outakumpa Oy. In: W.A. Hustrulid (Editor), Underground Mining Methods Handbook. SME of AIME, New York, Chap. 9.

Prugger, F.F., 1991. Personal communication.

Van Sambeek, L.L., Hansen, F.D., Gnirk, P.F. and Mahtab, M.A., 1979. National strategic crude oil storage in the Weeks Island dome salt mines — Part II: Rock mechanics evaluation. Trans. ASME, 101 (June): 87–92.

Wilson, A.H. and Ashwin, D.P., 1972. Research into the determination of pillar sizes — Part I: An hypothesis concerning pillar stability; Part II: Measurements of stresses in two pillars at Lea Hall Colliery. Trans. Inst. of Min. Eng., The Mining Engineer (London), 131 (141): 409–430.

CAVERN SOLUTIONING •
LABORATORY AND FIELD TESTING •
OPERATION AND STORAGE •
SUBSIDENCE AND ENVIRONMENT •
FINITE ELEMENT MODELING